GridTek 10

Power Processor for the Excel-S Home Wind System

The GridTek 10 power processor allows the Bergey Excel-S wind turbine to be connected to the wiring in your home. By making the wind turbine electricity identcial to utility power you can now generate your own power and even sell any excess back to the power company.

The GridTek 10 operates automatically under all conditions. And, it's utility friendly. It meets or exceeds the most stringent national standards for power quality and linemen safety, and it's certified by Underwriters Laboratory.

The GridTek 10 uses a powerful 32-bit microprocessor and state-of-the-art IGBT high-frequency power switches. But, it is specially engineered to make your life simple. It has only one button - a "Reset" button. To keep you informed, it has a digital display of operating status, turbine rotor speed, and output power.

And, it carries Bergey Windpower's exclusive 5-Year warranty!

The GridTek 10 is high technology made simple. Auto everything. One "Reset" button. That's it.

Specifications

Rated Power	10 kW
Efficiency	92%
Output	240 VAC, 60 Hz, 1 Ph. 220 VAC, 50 Hz, 1 Ph.
Power Factor	0.98 - 1.0
Total Harmonic Distortion	2.1%
Controls	DSP Digital
Power Switches	IGBT @ 15+ kHz
Compliances	UL 1741 IEEE 929 & 519
Temperature Range	0 - 40 Deg. C
Weight	115 lbs (53 kgs)
Mounting	Indoors, 16" Stud Spacing
Display	4 Line LCD

Dimensions

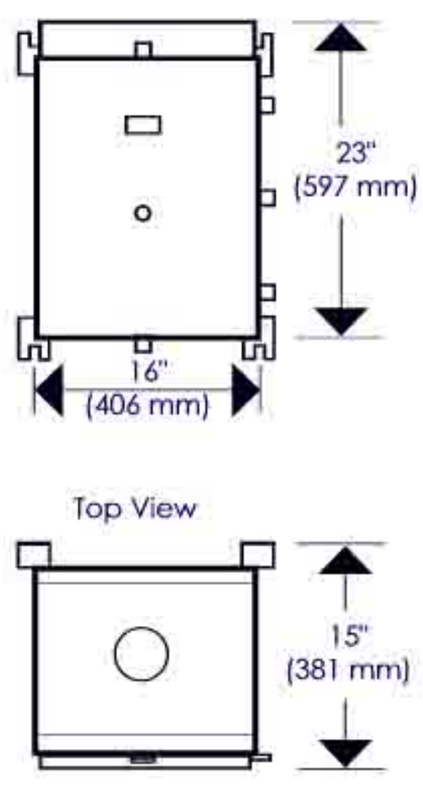

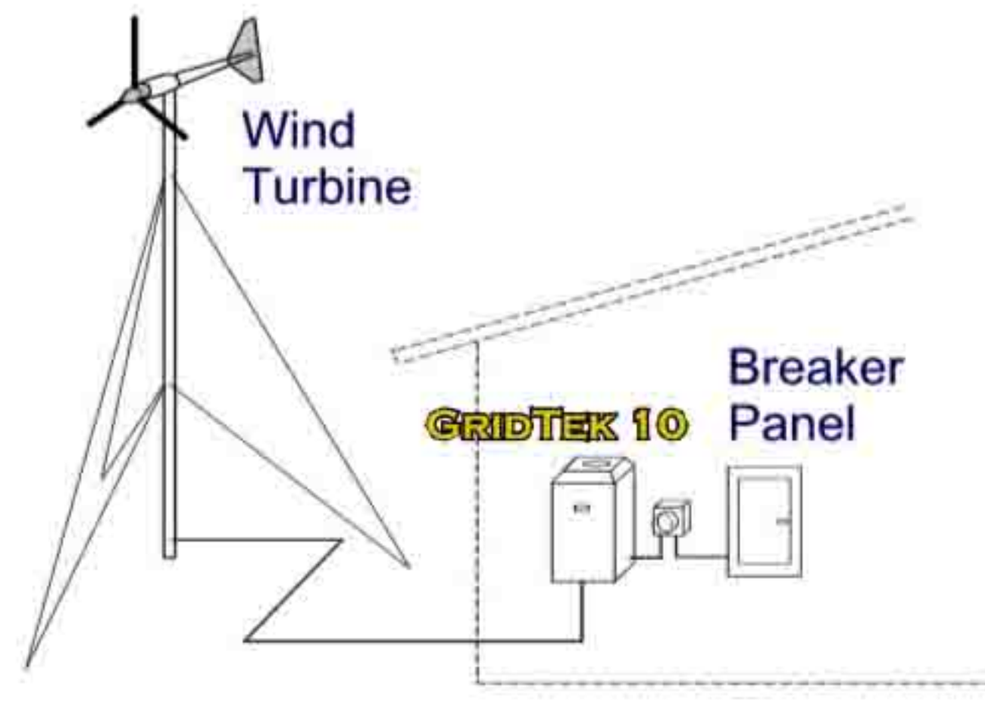

BERGEY WINDPOWER

SIMPLICITY • RELIABILITY • PERFORMANCE

2001 Priestley Ave.
Norman, OK 73069
T: 405-364-4212
F: 405-364-2078
sales@bergey.com
www.bergey.com